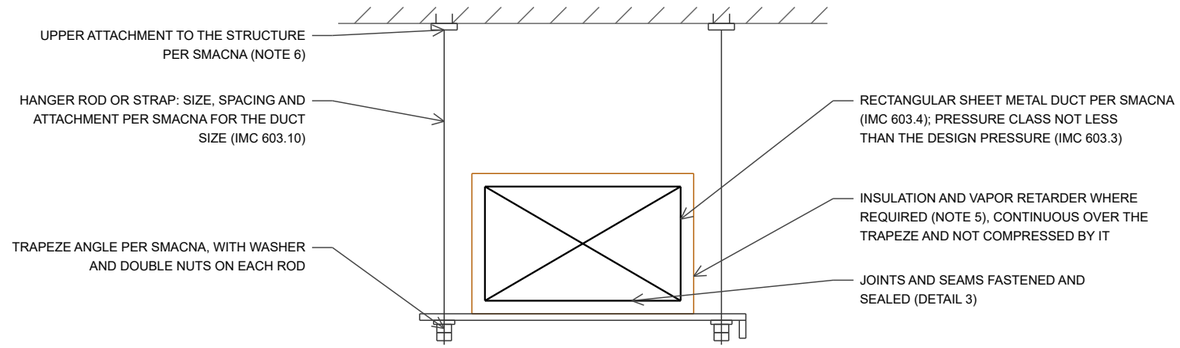

1 TYPICAL RECTANGULAR DUCT TRAPEZE HANGER

SCALE: NTS

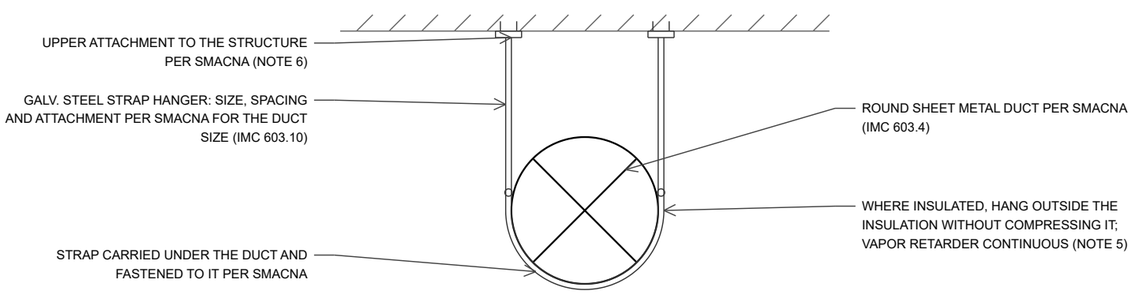

2 TYPICAL ROUND DUCT STRAP HANGER

SCALE: NTS

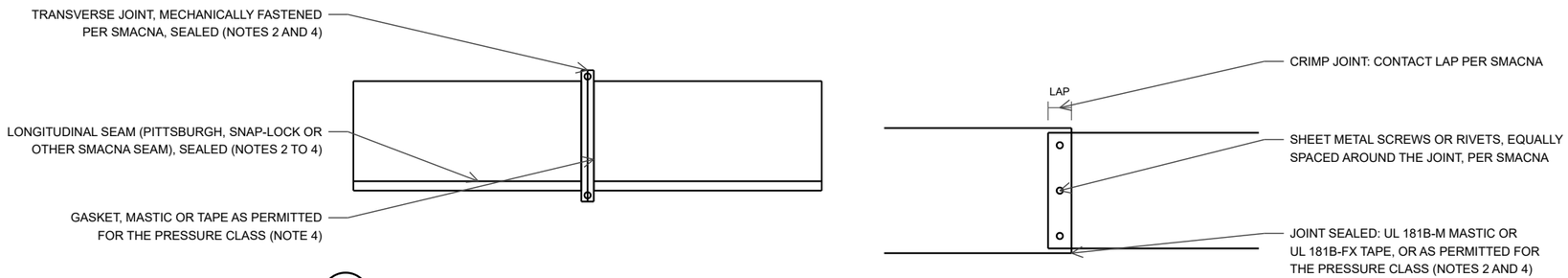

3 TYPICAL DUCT JOINTS AND SEAMS - FASTENING AND SEALING

SCALE: NTS

NOTES (ALL DETAILS):
1. METAL DUCTS CONSTRUCTED PER SMACNA (IMC 603.4); DUCTS IN SINGLE DWELLING UNITS: SEE ALSO IMC TABLE 603.4. PRESSURE CLASS NOT LESS THAN THE DESIGN PRESSURE OF THE SYSTEM (IMC 603.3), SHOWN ON THE CONSTRUCTION DOCUMENTS (IECC C403.13.2.1).
2. LONGITUDINAL AND TRANSVERSE JOINTS, SEAMS AND CONNECTIONS SECURELY FASTENED AND SEALED WITH WELDS, GASKETS, MASTICS, MASTIC-PLUS-EMBEDDED-FABRIC, LIQUID SEALANTS OR TAPES (IMC 603.9; IECC C403.13.1). TAPES AND MASTICS ON METAL DUCT: UL 181B, MARKED "181 B-FX" (TAPE) OR "181 B-M" (MASTIC).
3. SEAL SNAP-LOCK AND BUTTON-LOCK SEAMS AT ALL PRESSURE CLASSES. (THE EXCEPTIONS FOR LOCKING-TYPE SEAMS EXCLUDE THEM: IECC C403.13.2.1; IMC 603.9 OUTSIDE CONDITIONED SPACE.)
4. BY PRESSURE CLASS (IECC C403.13.2): 2" W.G. AND BELOW, FASTENED AND SEALED AS IN NOTE 2. ABOVE 2" W.G., INSULATED AND SEALED PER C403.13.1. 3" W.G. AND ABOVE: ALSO LEAK TESTED PER THE SMACNA HVAC AIR DUCT LEAKAGE TEST MANUAL, LEAKAGE CLASS (CL) 4.0 OR LESS, ON SECTIONS TOTALING NOT LESS THAN 25% OF THE DUCT AREA.
5. INSULATION PER IECC C403.13.1 FOR THE DUCT LOCATION AND CLIMATE ZONE. VAPOR RETARDER WHERE REQUIRED TO PREVENT CONDENSATION ON THE DUCT (IMC 603.12).
6. SUPPORTS PER SMACNA (IMC 603.10): HANGER SIZE, SPACING, UPPER ATTACHMENTS AND LOWER ATTACHMENTS FOR THE DUCT SIZE AND TYPE. FLEXIBLE AND OTHER FACTORY-MADE DUCTS PER THE MANUFACTURER'S INSTRUCTIONS. UPPER ATTACHMENTS TO THE STRUCTURE AS ACCEPTED BY THE ENGINEER OF RECORD.
7. SMACNA = HVAC DUCT CONSTRUCTION STANDARDS - METAL AND FLEXIBLE, 4TH EDITION (ANSI/SMACNA 006-2020), AS REFERENCED BY IMC CHAPTER 15.

CODES: IMC = 2024 INTERNATIONAL MECHANICAL CODE. IECC = 2024 INTERNATIONAL ENERGY CONSERVATION CODE, COMMERCIAL PROVISIONS. LOCAL EDITIONS AND AMENDMENTS MAY NUMBER OR WORD THESE SECTIONS DIFFERENTLY.

REV. 2026-11-15. TYPICAL DETAILS FOR REFERENCE ONLY, NOT FOR CONSTRUCTION. VERIFY AGAINST THE GOVERNING CODE, ITS EDITION AND AMENDMENTS, SMACNA AND THE PROJECT SPECIFICATIONS.